XMODS™ Custom RC

Wheel Upgrade for Hot Rod 60-8526

Customize the look of your vehicle with high performance wheels. This kit includes two front disc brakes, two rear disk brakes, 12 lug nuts, one lug nut wrench, and three (3) wheel sets. Each wheel set includes four (4) wheels, one set includes tires. Before installing, turn off your vehicle and controller, and detach the car body for easier access.

1. Use the supplied **lug nut wrench** to detach the **lug nuts** from each **wheel**.
2. Remove a **wheel** from the axle.
3. Place the **tires** on your **wheels** of choice. **Note:** The original tires received in your Starter Kit can be used unless your car is a Mustang or Camaro. These two car models

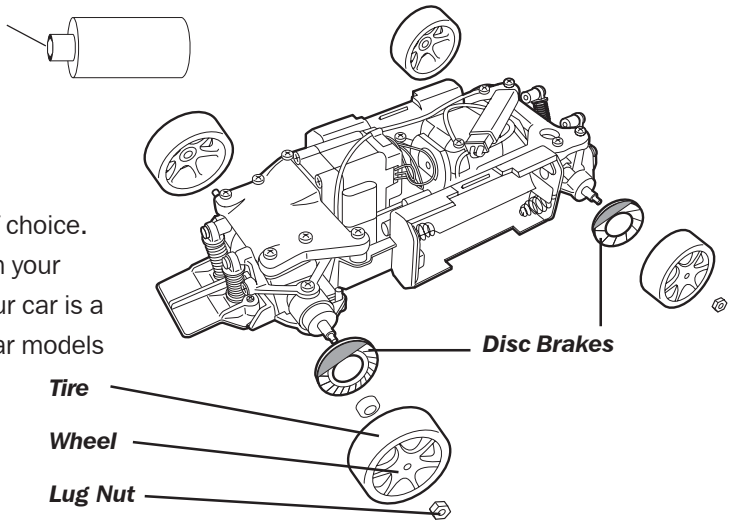

have different size tire diameters.

4. Snap the **disc brakes** onto the axle. The larger brakes go on the front axle, the smaller brakes go on the rear axle.
5. Align the flat side of the **wheel** with the flat side of the axle and slide the **wheel** onto the same axle.
6. Screw the **lug nut** onto the axle and tighten with the supplied **lug nut wrench**.
7. Repeat steps 2-6 for each **wheel**.

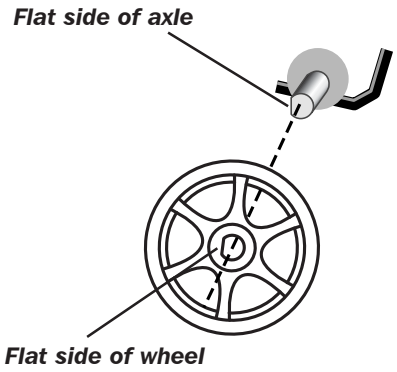

©2004 RadioShack Corporation
All Rights Reserved.
RadioShack and RadioShack.com are trademarks used by RadioShack Corporation.

06A04
INS-3271-US-00
Printed in China

www.xmodsRC.com